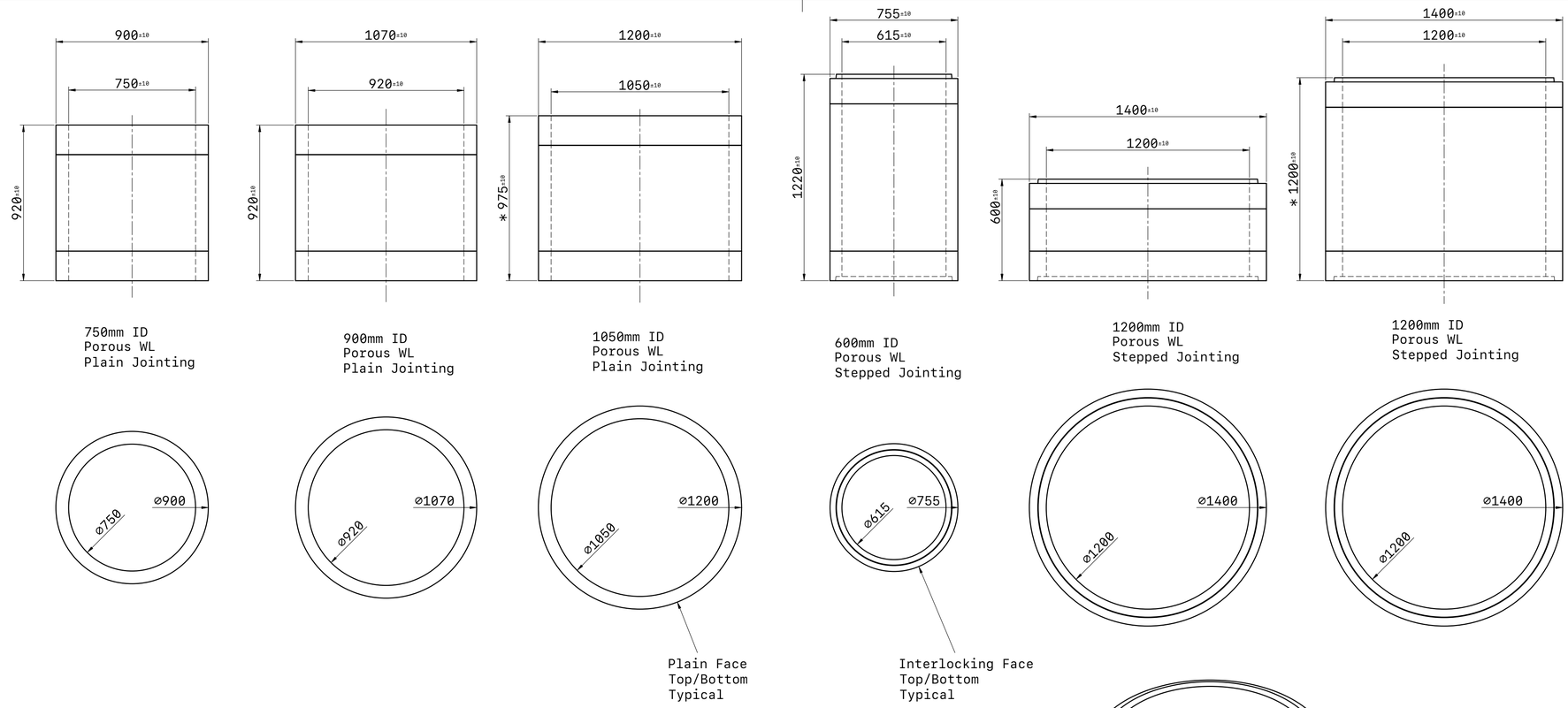

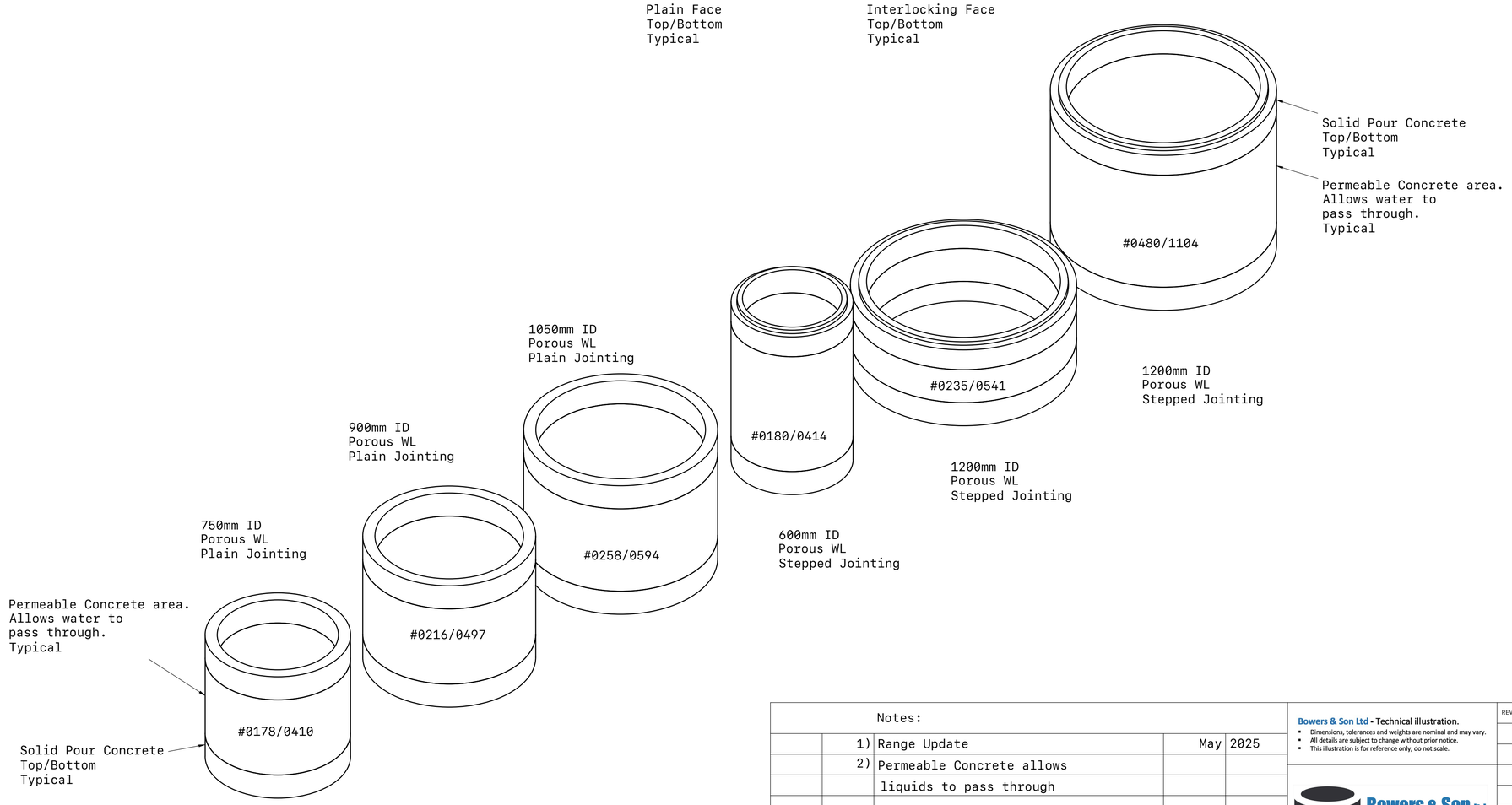

Notes:

1)	Range Update	May	2025
2)	Permeable Concrete allows liquids to pass through		

Bowers & Son Ltd - Technical illustration.

- Dimensions, tolerances and weights are nominal and may vary.
- All details are subject to change without prior notice.
- This illustration is for reference only, do not scale.

Bowers & Son ltd
Concrete Manufacturers

REVISION	NAME	DATE

TITLE: Porous Well Liners

TITLE: Porous WL Composite V1

UNITS	PROJ. ANG.	SIZE
mm		A1
SCALE	LAST UPDATED	SHEET
1:16	05/05/25	1/1