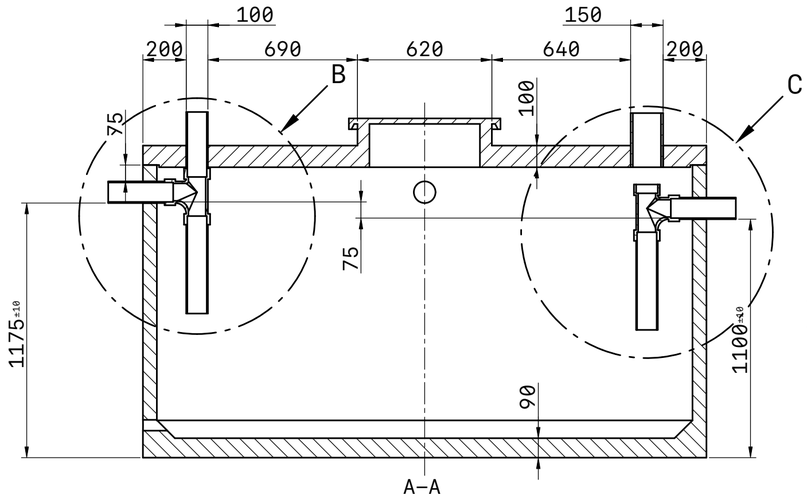

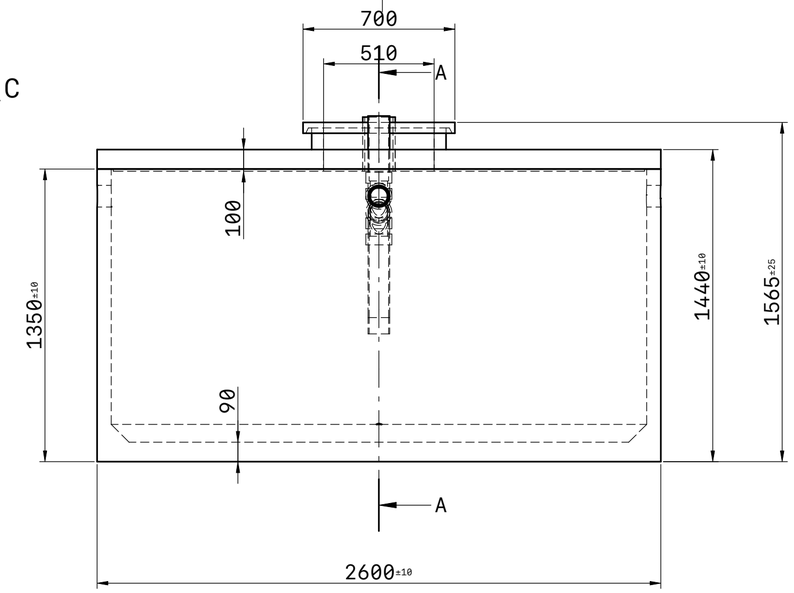

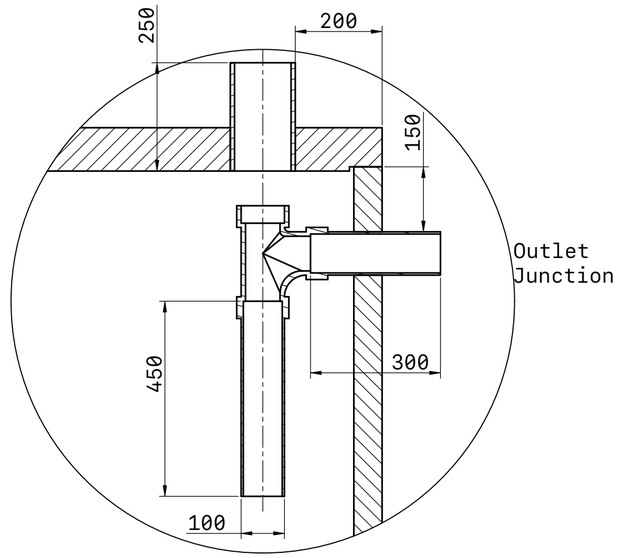

C
SCALE 1:10

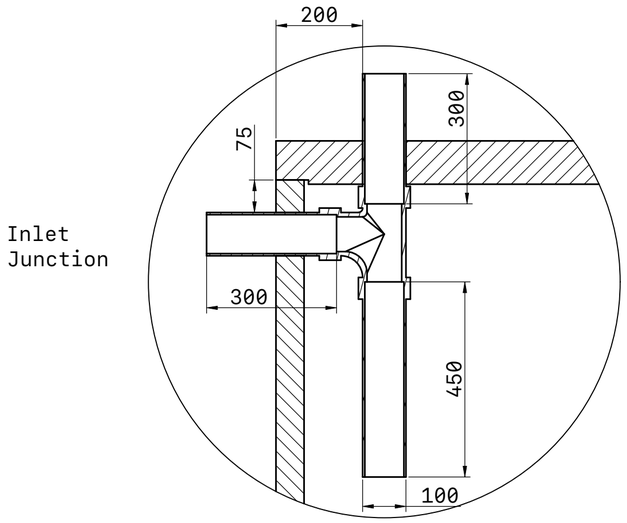

B
SCALE 1:10

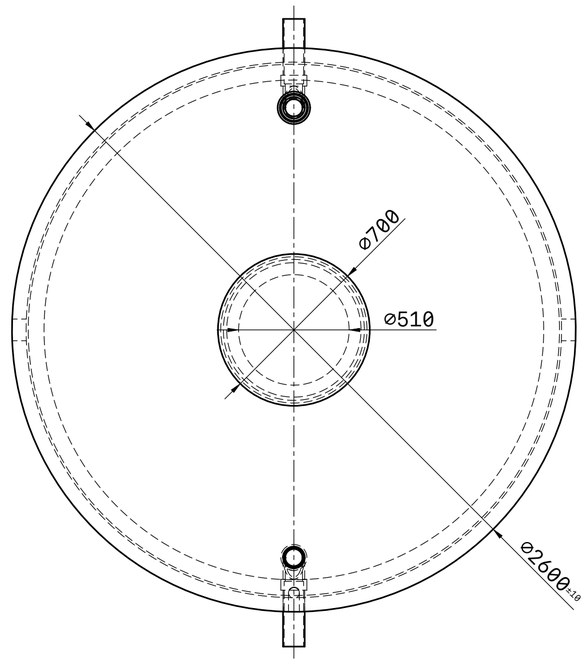

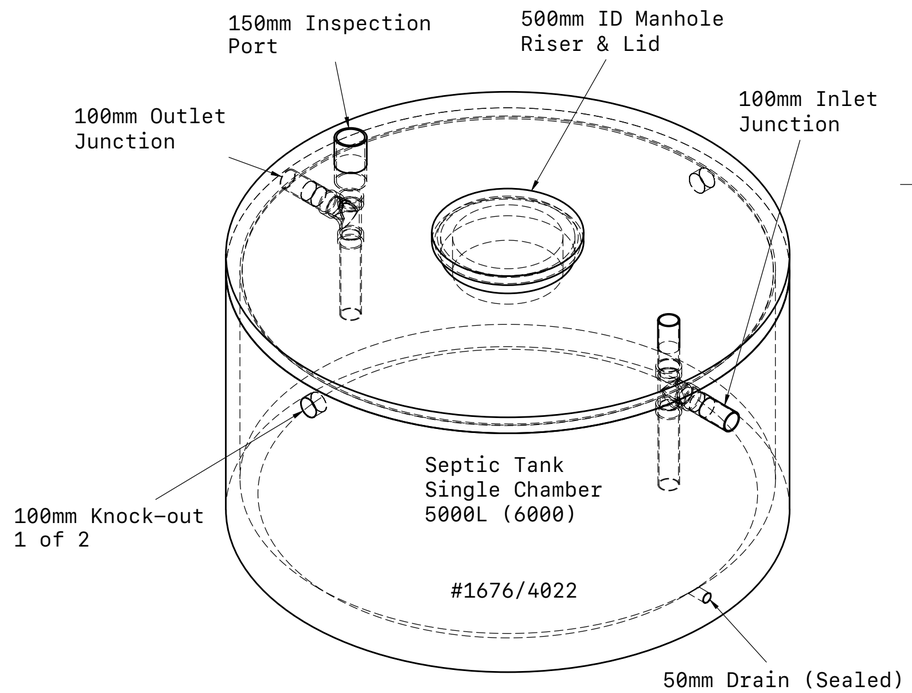

Notes:

1)	Dimension & format update	May	2025
2)	Inlet Outlet Core Drill		

Bowers & Son Ltd - Technical illustration.

- Dimensions, tolerances and weights are nominal and may vary.
- All details are subject to change without prior notice.
- This illustration is for reference only, do not scale.

Bowers & Son ltd
Concrete Manufacturers

REVISION	NAME	DATE

ST SC 5000L

TITLE
ST SC 5000L (6000) V1

UNITS	PROJ. ANG.	SIZE
mm		A2
SCALE	LAST UPDATED	SHEET
1:20	05/28/25	1/1