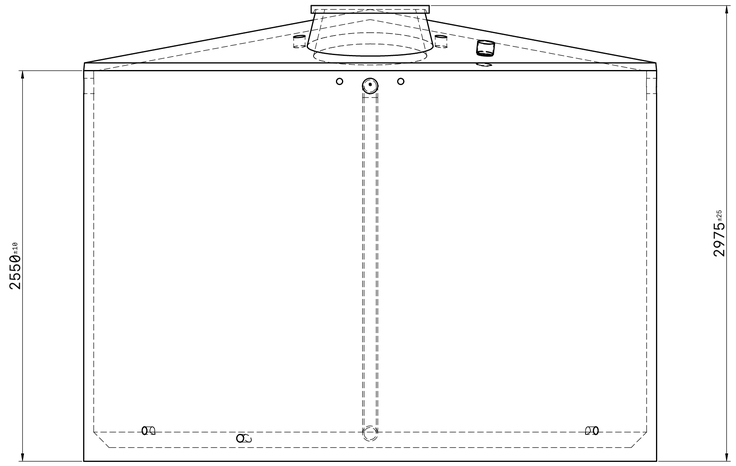

Standard / Cone Top 25,000L
Water Tank. Above ground or
semi-buried usage.

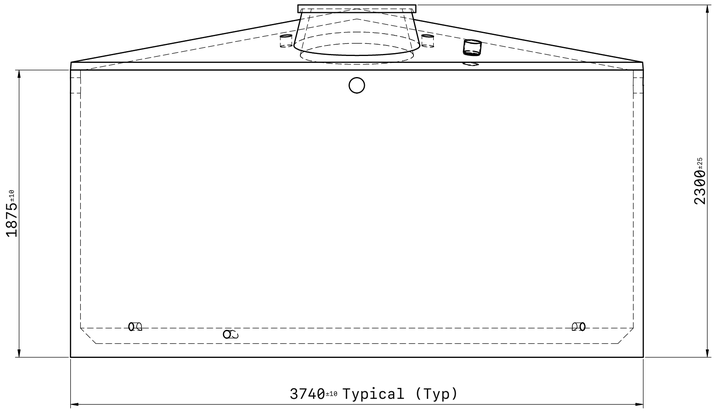

Standard / Cone Top 18,000L
Water Tank. Above ground or
semi-buried usage.

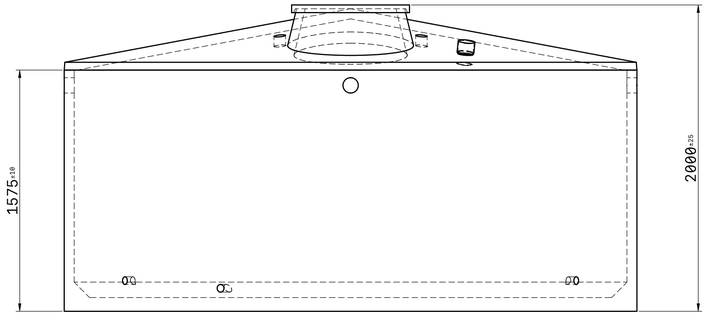

Standard / Cone Top 15,000L
Water Tank. Above ground or
semi-buried usage.

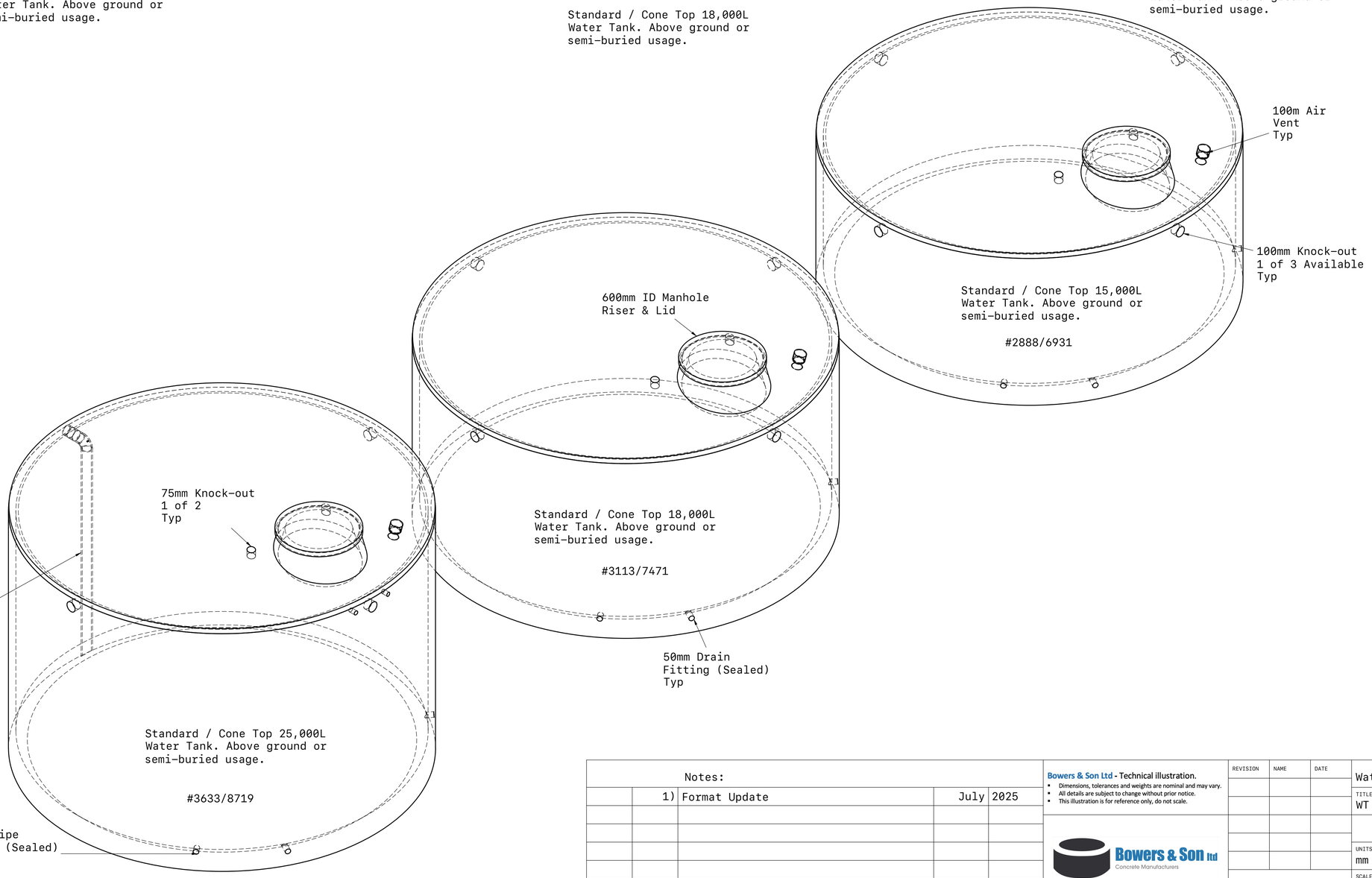

Notes:

1)	Format Update	July	2025

Bowers & Son Ltd - Technical illustration.

- Dimensions, tolerances and weights are nominal and may vary.
- All details are subject to change without prior notice.
- This illustration is for reference only, do not scale.

Bowers & Son ltd
Concrete Manufacturers

REVISION	NAME	DATE

Water Tanks Composite

TITLE: WT STD 15,18,25kL V1

UNITS	PROJ. ANG.	SIZE
mm		A1
SCALE	LAST UPDATED	SHEET
1:20	07/09/25	1/1